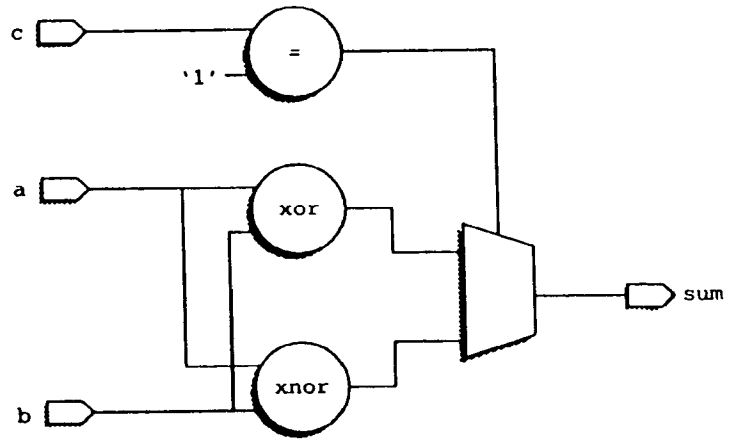

Figure 3.2 Hardware mapping of conditional signal assignment.

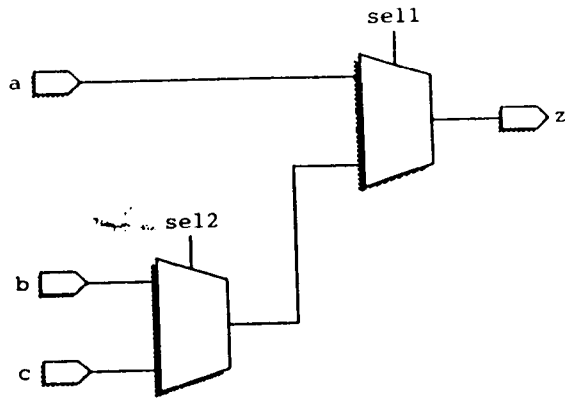

Figure 3.3 Multi-way conditional signal assignment.