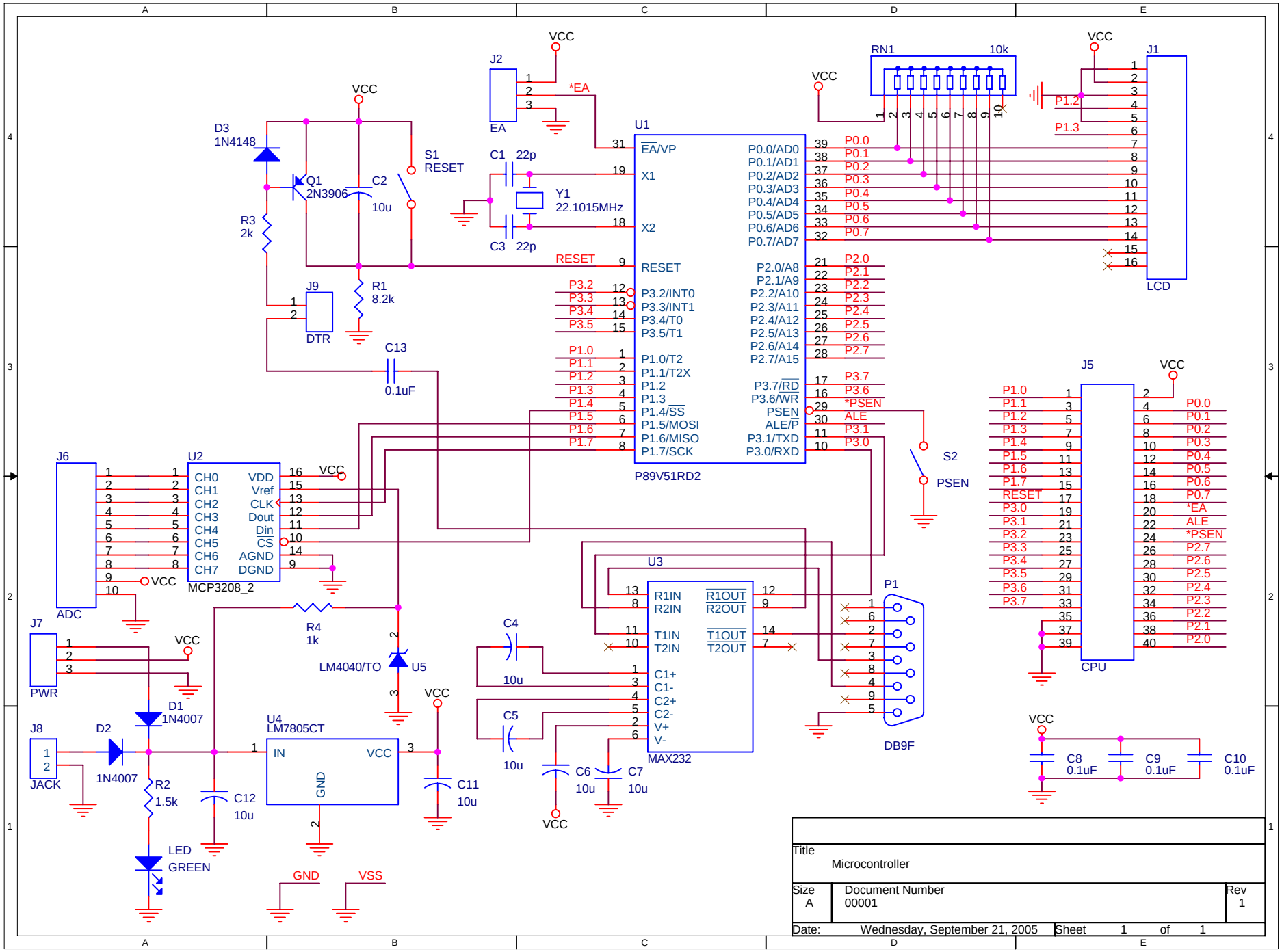
U1
P89V51RD2
EA/VP
X1
X2
RESET
P3.2/INT0
P3.3/INT1
P3.4/T0
P3.5/T1
P1.0/T2
P1.1/T2X
P1.2
P1.3
P1.4/SS
P1.5/MOSI
P1.6/MISO
P1.7/SCK
P0.0/AD0
P0.1/AD1
P0.2/AD2
P0.3/AD3
P0.4/AD4
P0.5/AD5
P0.6/AD6
P0.7/AD7
P2.0/A8
P2.1/A9
P2.2/A10
P2.3/A11
P2.4/A12
P2.5/A13
P2.6/A14
P2.7/A15
P3.7/RD
P3.6/WR
PSEN
ALE/P
P3.1/TXD
P3.0/RXD
U2
MCP3208_2
CH0
CH1
CH2
CH3
CH4
CH5
CH6
CH7
VDD
Vref
CLK
Dout
Din
CS
AGND
DGND
U3
MAX232
R1IN
R2IN
T1IN
T2IN
R1OUT
R2OUT
T1OUT
T2OUT
C1+
C1-
C2+
C2-
V+
V-
U4
LM7805CT
IN
VCC
GND
U5
LM4040/TO
J1
LCD
J2
EA
J5
CPU
J6
ADC
J7
PWR
J8
JACK
J9
DTR
P1
DB9F
RN1
10k
S1
RESET
S2
PSEN
D1
1N4007
D2
1N4007
D3
1N4148
Q1
2N3906
LED
GREEN
Y1
22.1015MHz
C1 22p
C2 10u
C3 22p
C4 10u
C5 10u
C6 10u
C7 10u
C8 0.1uF
C9 0.1uF
C10 0.1uF
C11 10u
C12 10u
C13 0.1uF
R1 8.2k
R2 1.5k
R3 2k
R4 1k
VCC
GND
VSS
*EA
*PSEN
ALE
RESET
P1.2
P1.3
P3.2
P3.3
P3.4
P3.5
P1.0
P1.1
P1.2
P1.3
P1.4
P1.5
P1.6
P1.7
P0.0
P0.1
P0.2
P0.3
P0.4
P0.5
P0.6
P0.7
P2.0
P2.1
P2.2
P2.3
P2.4
P2.5
P2.6
P2.7
P3.7
P3.6
P3.1
P3.0
Title
Microcontroller
Size
A
Document Number
00001
Rev
1
Date:
Wednesday, September 21, 2005
Sheet
1
of
1