Compatible Improvement of the GSM/GPRS System by Means of Delay Diversity

Jan Mietzner and *Peter A. Hoeher*

Information and Coding Theory Lab (ICT)
University of Kiel, Germany

{jm,ph}@tf.uni-kiel.de
http://www.tf.uni-kiel.de/ict

Magnus Sandell

Toshiba
Telecommunication Research Laboratory
Bristol, United Kingdom

Magnus.Sandell@toshiba-trel.com

ICC 2003, Anchorage, Alaska, USA
May 11-15, 2003

Currently:

In many current cellular systems two (or more) Tx antennas are used **at the BS**, where the Tx signal is **simultaneously** transmitted over each antenna.

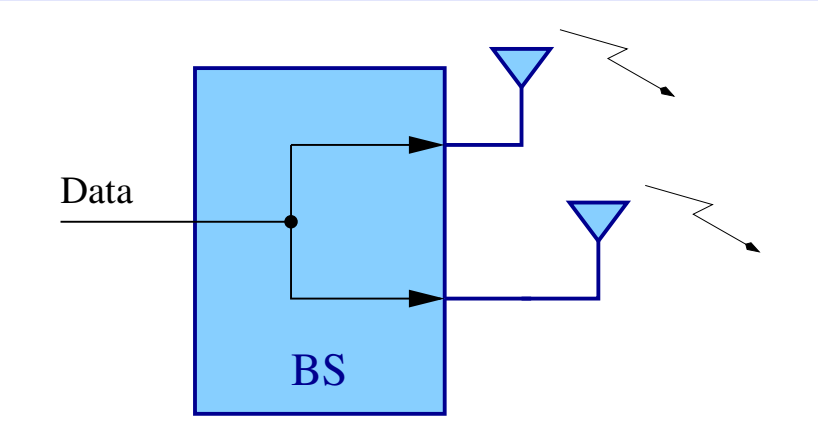

Currently:

In many current cellular systems two (or more) Tx antennas are used **at the BS**, where the Tx signal is **simultaneously** transmitted over each antenna.

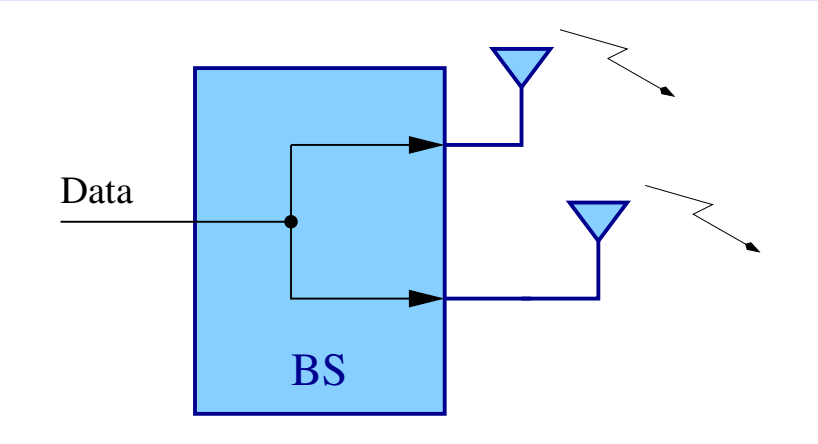

Enhancement:

"Space-time" processing.

Goal: Compatibility, i.e., preferably **few** changes w.r.t. current systems.

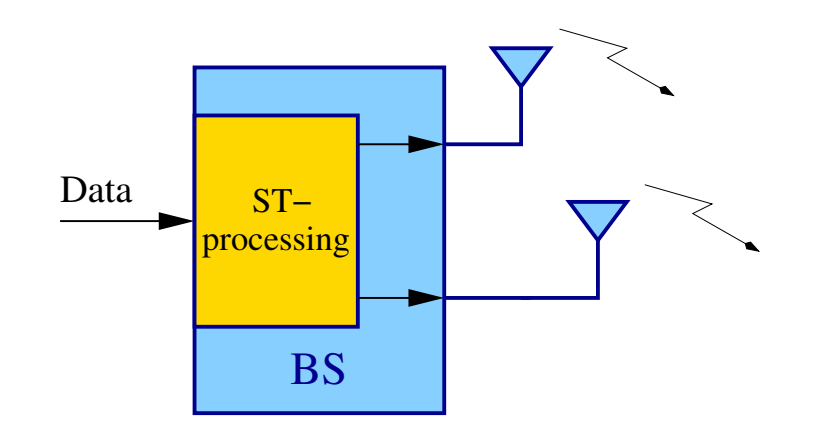

Jan Mietzner
ICT, University of Kiel

Simple Example: Delay Diversity

- Wittneben, 1993
- Seshadri and Winters, 1994

Jan Mietzner
ICT, University of Kiel

Simple Example: Delay Diversity

- Wittneben, 1993
- Seshadri and Winters, 1994

Idea: Apply a **delay** at the second Tx antenna.

Shown here: **Significant** performance improvements may be obtained using the **same** receiver. (Example: GSM/GPRS System)

Simple Example: Delay Diversity

- Wittneben, 1993
- Seshadri and Winters, 1994

Idea: Apply a **delay** at the second Tx antenna.

Shown here: **Significant** performance improvements may be obtained using the **same** receiver. (Example: GSM/GPRS System)

$\Longrightarrow$ **Delay diversity** may be offered by network operators even in **existing systems**, since the standard is not affected at all.

General Context (I)

- **Wireless data services:**
  - Require reliable transmission of **high** data rates.
  - Normally **asymmetric**: Major part of overall traffic in downlink (DL) direction (e.g., download of large amount of data by mobile users).

General Context (I)

- **Wireless data services:**
  - Require reliable transmission of **high** data rates.
  - Normally **asymmetric**: Major part of overall traffic in downlink (DL) direction (e.g., download of large amount of data by mobile users).

- **Space-Time Codes (STC):**
  - Special class of space-time processing schemes requiring solely **multiple Tx antennas**, whereas multiple Rx antennas are **optional**.

$\longrightarrow$ Well suited to enhance the **crucial** DL.

General Context (I)

- **Wireless data services:**
  - Require reliable transmission of **high** data rates.
  - Normally **asymmetric**: Major part of overall traffic in downlink (DL) direction (e.g., download of large amount of data by mobile users).

- **Space-Time Codes (STC):**
  - Special class of space-time processing schemes requiring solely **multiple Tx antennas**, whereas multiple Rx antennas are **optional**.

$\longrightarrow$ Well suited to enhance the **crucial** DL.

  - **Examples:** Space-Time Trellis Codes (STTC), Space-Time Block Codes (STBC).

    Delay diversity may be interpreted as the simplest special case of a STTC.

General Context (II)

- **Efficiency** of STC in fading environments due to a **diversity gain**:
  - Individual transmission paths are subject to **independent fading**, i.e., probability that all paths are simultaneously corrupted is smaller.

$\longrightarrow$ **Lower** bit error rates accomplished.

General Context (II)

- **Efficiency** of STC in fading environments due to a **diversity gain**:
  - Individual transmission paths are subject to **independent fading**, i.e., probability that all paths are simultaneously corrupted is smaller.

$\longrightarrow$ **Lower** bit error rates accomplished.

- In 2.5G/3G systems, typically **adaptive** channel coding/ modulation is applied.

$\longrightarrow$ Any means to improve power efficiency (e.g., utilization of diversity) leads to an **improved bandwidth efficiency**.

General Context (II)

- **Efficiency** of STC in fading environments due to a **diversity gain**:
  - Individual transmission paths are subject to **independent fading**, i.e., probability that all paths are simultaneously corrupted is smaller.

$\longrightarrow$ **Lower** bit error rates accomplished.

- In 2.5G/3G systems, typically **adaptive** channel coding/ modulation is applied.

$\longrightarrow$ Any means to improve power efficiency (e.g., utilization of diversity) leads to an **improved bandwidth efficiency**.

$\Longrightarrow$ **Enhancement** of DL direction by means of STC for the purpose of **higher** data rates is **very attractive**.

Outline

- Transmitter structure for the GSM/GPRS DL improved by means of delay diversity
- Simulation results for a typical urban (TU) channel model
- Analytical results and optimization of the delay at the second Tx antenna
- Conclusions

Compatible Transmitter Structure for the GSM/GPRS DL (I)

- **GPRS** ('General Packet Radio Service'):
  - GPRS is used for the transfer of packet-switched data.
  - GSM/GPRS is often referred to as a '2.5G system'.

- **Original** GSM/GPRS transmitter structure:
  - Channel coding & interleaving according to adaptive channel coding schemes 'CS 1-4'.

Compatible Transmitter Structure for the GSM/GPRS DL (I)

- **GPRS** ('General Packet Radio Service'):
  - GPRS is used for the transfer of packet-switched data.
  - GSM/GPRS is often referred to as a '2.5G system'.

- **Original** GSM/GPRS transmitter structure:
  - Channel coding & interleaving according to adaptive channel coding schemes 'CS 1-4'.

- **Compatible** upgrade:
  - Transmitter: The **same signal** is transmitted from both antennas, using a delay δT at the second antenna (T symbol duration).
  - Receiver: The **same receiver** may be used as in the conventional system.

Compatible Transmitter Structure for the GSM/GPRS DL (II)

- Transmitter structure (baseband representation):

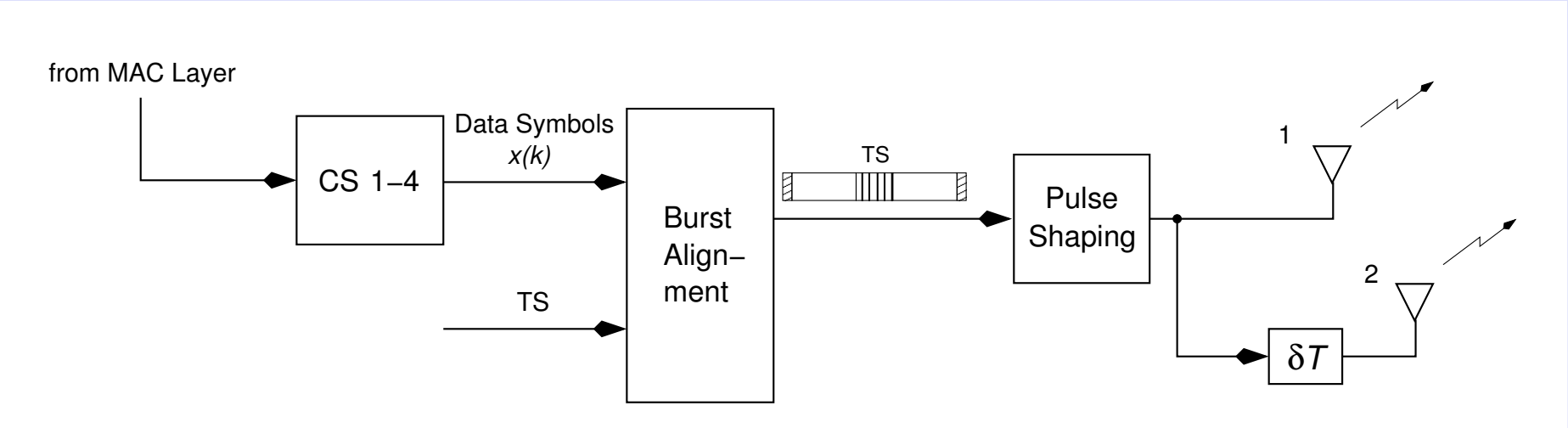

Compatible Transmitter Structure for the GSM/GPRS DL (II)

- Transmitter structure (baseband representation):

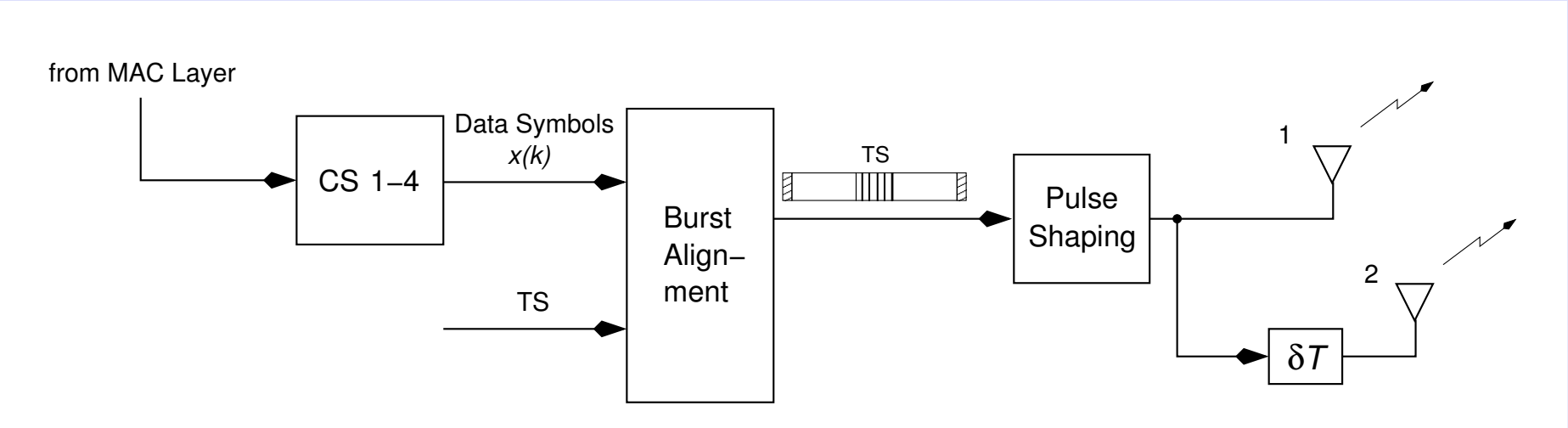

  - The conventional choice is $\delta = 0$.

Compatible Transmitter Structure for the GSM/GPRS DL (II)

- Transmitter structure (baseband representation):

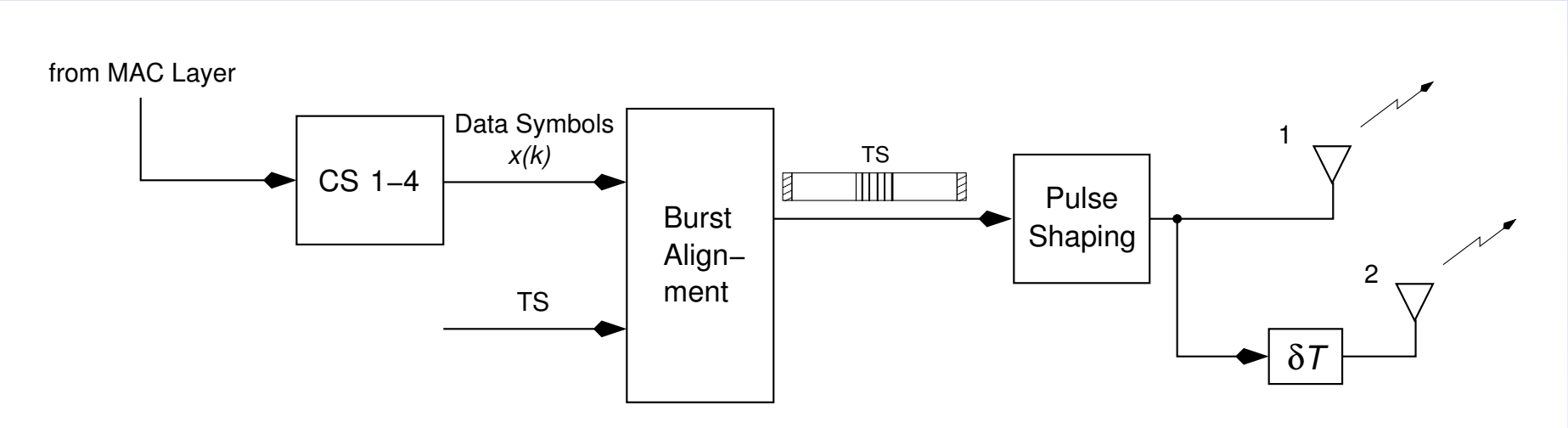

  - The conventional choice is $\delta = 0$.
  - For delay diversity, typically $\delta = 1$ is chosen (optimal in case of a flat fading channel).

Compatible Transmitter Structure for the GSM/GPRS DL (II)

- Transmitter structure (baseband representation):

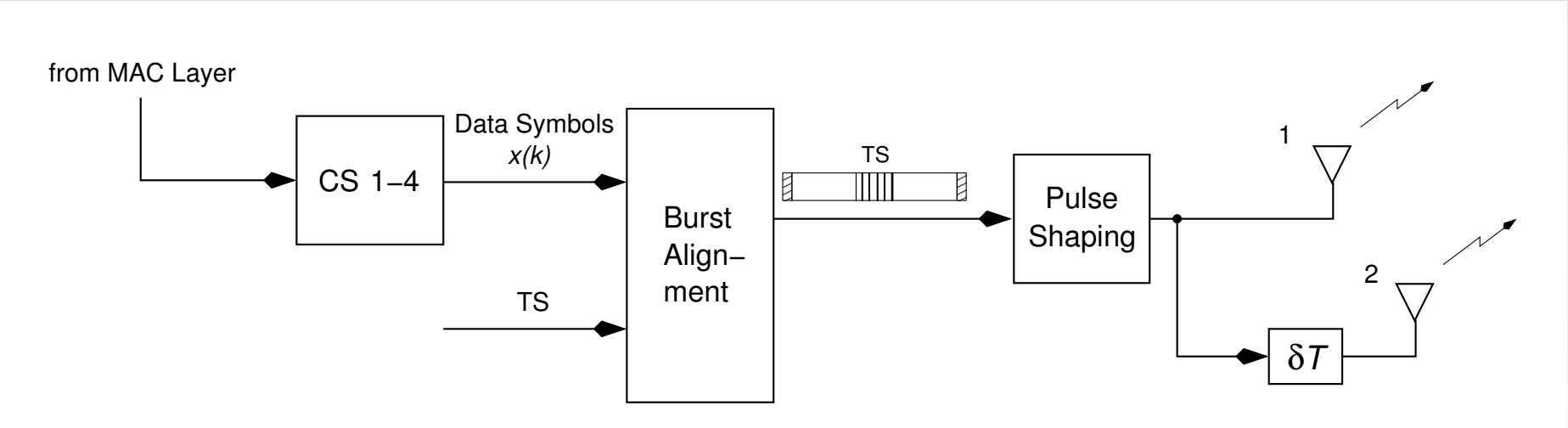

  - The conventional choice is $\delta = 0$.
  - For delay diversity, typically $\delta = 1$ is chosen (optimal in case of a flat fading channel).
  - **Question:** Optimal choice of δ in case of frequency-selective fading channel?

Simulation Results for the TU Channel Model

- Uncoded transmission
- Delay parameter $\delta = 1, 2, 3$
- 1 or 2 Rx antennas
- Channel perfectly known at the receiver
- Root-raised-cosine Rx filter
- Max-Log-MAP equalizer/detector

Jan Mietzner
ICT, University of Kiel

Simulation Results for the TU Channel Model

- Uncoded transmission
- Delay parameter $\delta = 1, 2, 3$
- 1 or 2 Rx antennas
- Channel perfectly known at the receiver
- Root-raised-cosine Rx filter
- Max-Log-MAP equalizer/detector

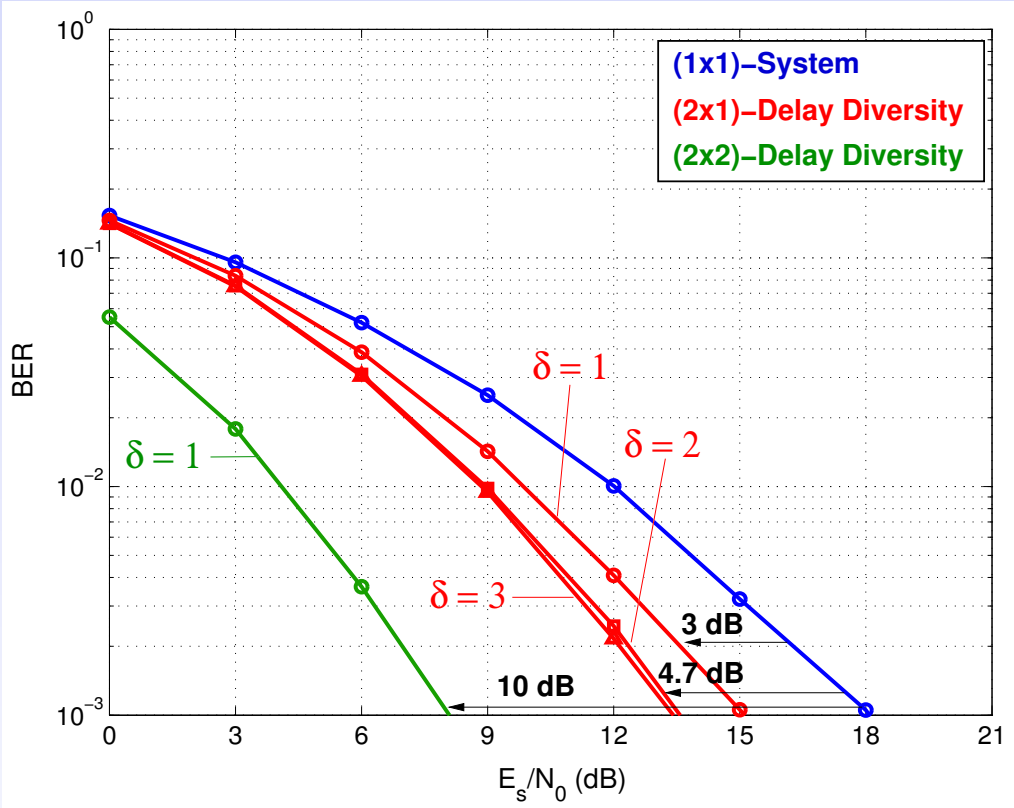

Jan Mietzner
ICT, University of Kiel

Simulation Results for the TU Channel Model

- Uncoded transmission
- Delay parameter $\delta = 1, 2, 3$
- 1 or 2 Rx antennas
- Channel perfectly known at the receiver
- Root-raised-cosine Rx filter
- Max-Log-MAP equalizer/detector

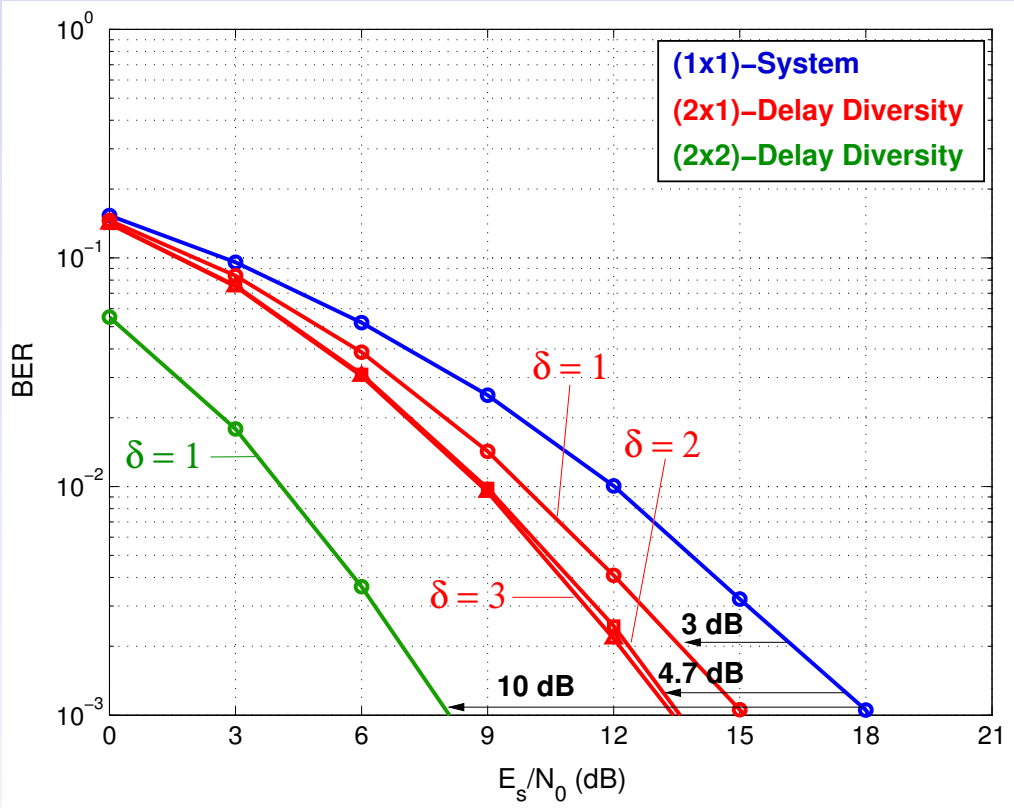

$\Longrightarrow$ With delay diversity, significant gains w.r.t. conventional system.
Maximum gain for $\delta = 3$.

Jan Mietzner
ICT, University of Kiel

Analytical Results and Optimization of the Delay Parameter (I)

RAKE receiver bound (RRB): Lower bound on the **bit error probability** of a slowly time-varying ISI channel.

- **Maximum likelihood (ML) detection** assumed (particularly, **perfect knowledge** of the channel coefficients in the receiver).

  Individual channel coefficients are assumed to fade **independently**.

Analytical Results and Optimization of the Delay Parameter (I)

RAKE receiver bound (RRB): Lower bound on the **bit error probability** of a slowly time-varying ISI channel.

- **Maximum likelihood (ML) detection** assumed (particularly, **perfect knowledge** of the channel coefficients in the receiver).

  Individual channel coefficients are assumed to fade **independently**.

$$P_b^{\mathrm{RRB}} = \frac{1}{2} \sum_{l=0}^{L} \left(\prod_{\substack{\nu=0 \\ \rho\nu \neq \rho_l}}^{L} \frac{\rho_l}{\rho_l - \rho_\nu} \right) \cdot \left(1 - \frac{1}{\sqrt{1 + \frac{N_o}{E_s} \frac{1}{\rho_l}}} \right) \tag{1}$$

- L: Channel memory length
  E_s: Mean energy per data symbol
  N_o: Single-sided noise power density
  ρ_l: Mean power of the lth channel coefficient ($0 \leq l \leq L$)

Jan Mietzner
ICT, University of Kiel

Analytical Results and Optimization of the Delay Parameter (II)

- **Tightening the RRB:**
  - Channel coefficients normally comprise both **static ISI** (due to pulse shaping and receiver filter) and **dynamic ISI** (due to physical channel).
  - **Diversity** is solely due to dynamic ISI. Hence, the RRB **overestimates** the degree of diversity actually utilized, i.e., the bound is too **optimistic**.

Jan Mietzner
ICT, University of Kiel

Analytical Results and Optimization of the Delay Parameter (II)

- **Tightening the RRB:**
  - Channel coefficients normally comprise both **static ISI** (due to pulse shaping and receiver filter) and **dynamic ISI** (due to physical channel).
  - **Diversity** is solely due to dynamic ISI. Hence, the RRB **overestimates** the degree of diversity actually utilized, i.e., the bound is too **optimistic**.

$\longrightarrow$ Method to **remove** static ISI from the channel coefficients to **tighten** the bound.

Jan Mietzner
ICT, University of Kiel

Analytical Results and Optimization of the Delay Parameter (II)

- **Tightening the RRB:**
  - Channel coefficients normally comprise both **static ISI** (due to pulse shaping and receiver filter) and **dynamic ISI** (due to physical channel).
  - **Diversity** is solely due to dynamic ISI. Hence, the RRB **overestimates** the degree of diversity actually utilized, i.e., the bound is too **optimistic**.

$\longrightarrow$ Method to **remove** static ISI from the channel coefficients to **tighten** the bound.

- **Delay diversity:** Exploit the fact that **same** signal is transmitted over **both** Tx antennas.

$\longrightarrow$ Derive equivalent **single** Tx antenna channel model.

Analytical Results and Optimization of the Delay Parameter (II)

- **Tightening the RRB:**
  - Channel coefficients normally comprise both **static ISI** (due to pulse shaping and receiver filter) and **dynamic ISI** (due to physical channel).
  - **Diversity** is solely due to dynamic ISI. Hence, the RRB **overestimates** the degree of diversity actually utilized, i.e., the bound is too **optimistic**.

$\longrightarrow$ Method to **remove** static ISI from the channel coefficients to **tighten** the bound.

- **Delay diversity:** Exploit the fact that **same** signal is transmitted over **both** Tx antennas.

$\longrightarrow$ Derive equivalent **single** Tx antenna channel model.

$\longrightarrow$ Specifically, the **mean power** of the lth coefficient of the equivalent channel model results as

$$\rho_l(\delta) = \int_0^{\tau_{max}} p(\tau) \left(|g(lT-\tau)|^2 + |g(lT-\delta-\tau)|^2 \right) d\tau \,. \tag{2}$$

- $g(t)$: Overall impulse response of pulse shaping filter and receiver filter
- $p(\tau)$: Pdf proportional to the delay power density profile (e.g., GSM 05.05 propagation profile)

Analytical Results and Optimization of the Delay Parameter (III)

- **Truncated equalizer/detector:** Trellis-based equalizer/detector of length L_{eq}, only takes the first $L_{eq}+1$ channel coefficients into account ($L_{eq} < L$).

$\longrightarrow$ Sum and product in the RRB are from 0 to L_{eq}.

$\longrightarrow$ Neglected channel coefficients cause **residual ISI**, resulting in a **transformed** SNR denoted as E_s/N_o'.

Analytical Results and Optimization of the Delay Parameter (III)

- **Truncated equalizer/detector:** Trellis-based equalizer/detector of length L_{eq}, only takes the first $L_{eq}+1$ channel coefficients into account ($L_{eq} < L$).

$\longrightarrow$ Sum and product in the RRB are from 0 to L_{eq}.

$\longrightarrow$ Neglected channel coefficients cause **residual ISI**, resulting in a **transformed** SNR denoted as E_s/N_o'.

Finally: Modified RRB as a function of delay parameter δ applied at Tx antenna 2, given different equalizer/detector lengths L_{eq} (1 Rx antenna assumed).

$$P_b^{\mathrm{RRB}}(\delta) = \frac{1}{2}\sum_{l=0}^{L_{eq}} \left(\prod_{\substack{\nu=0 \\ \rho_\nu \neq \rho_l}}^{L_{eq}} \frac{\rho_l(\delta)}{\rho_l(\delta) - \rho_\nu(\delta)} \right) \cdot \left(1 - \frac{1}{\sqrt{1 + \frac{N_o'}{E_s}\frac{1}{\rho_l(\delta)}}} \right) \tag{3}$$

Jan Mietzner
ICT, University of Kiel

Analytical Results and Optimization of the Delay Parameter (IV)

- **Example:** GSM propagation profile TU, $E_s/N_o = 10$ dB

Jan Mietzner
ICT, University of Kiel

Analytical Results and Optimization of the Delay Parameter (IV)

- **Example:** GSM propagation profile TU, $E_s/N_o = 10$ dB

RRB as a function of δ

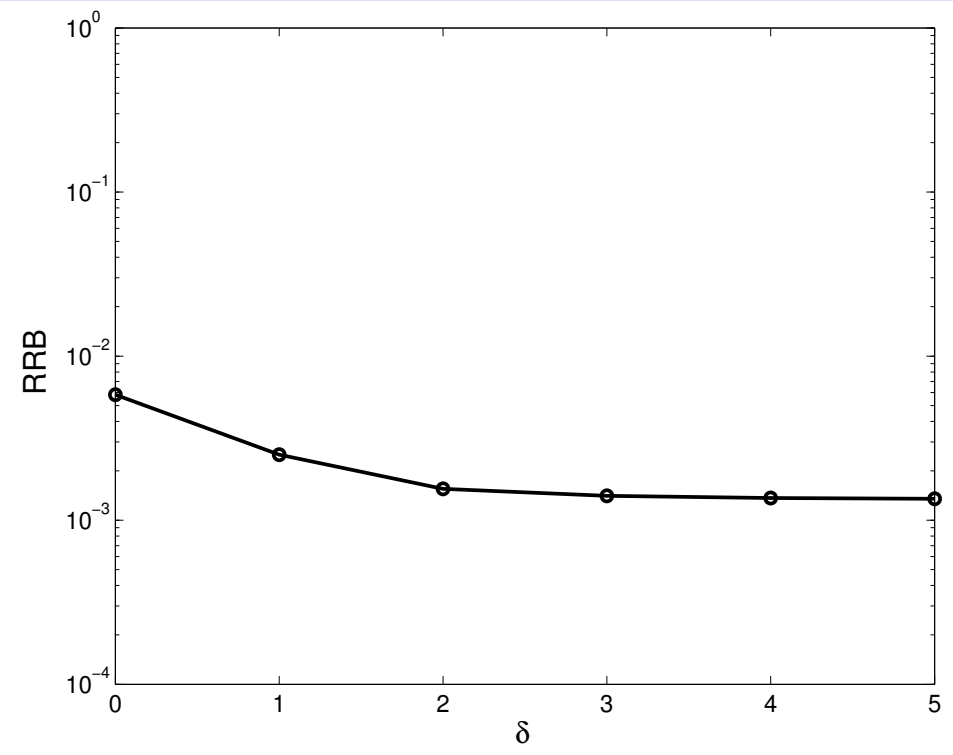

- **Case #1:** $L_{eq} = L$

Obviously, δ should be chosen as $\delta \geq 3$.

Neither $\delta = 0$ nor $\delta = 1$ is optimal.

Analytical Results and Optimization of the Delay Parameter (V)

- **Example:** GSM propagation profile TU, $E_s/N_o = 10$ dB

RRB as a function of δ

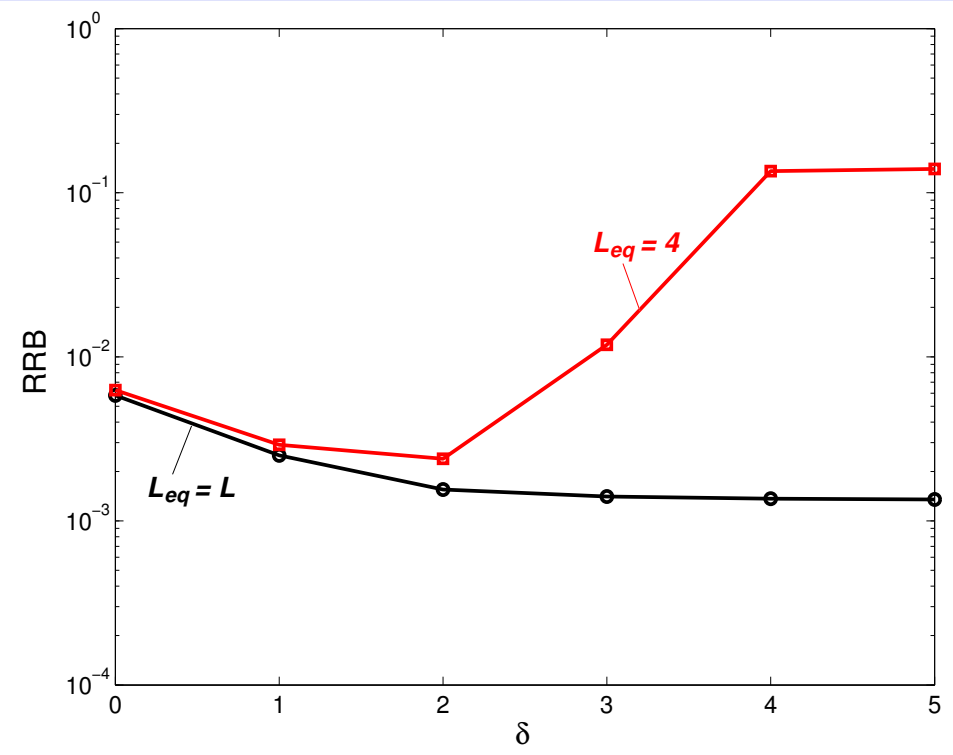

- **Case #2:** $L_{eq} < L$

  Example: $L_{eq} = 4$

Analytical Results and Optimization of the Delay Parameter (VI)

- **Discussion:**

Small δ: RRB follows the curve for $L_{eq} = L$.

Medium δ: Significant fractions of $\rho_l(\delta)$ are neglected by the equalizer.

$\longrightarrow$ Increased bit error probability.

Large δ: Further increase of δ does not lead to additional performance loss.

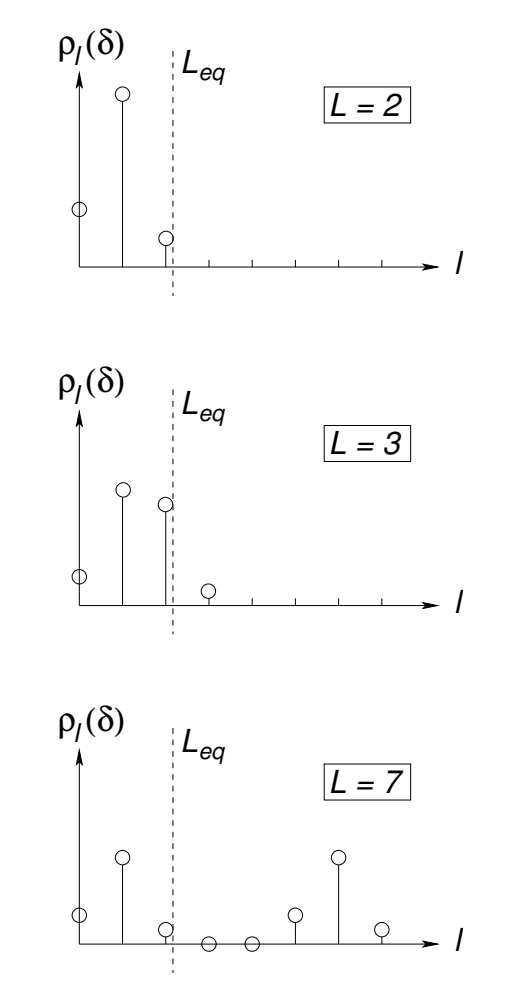

Analytical Results and Optimization of the Delay Parameter (VII)

- **Example:** GSM propagation profile TU, $E_s/N_o = 10$ dB

RRB as a function of δ

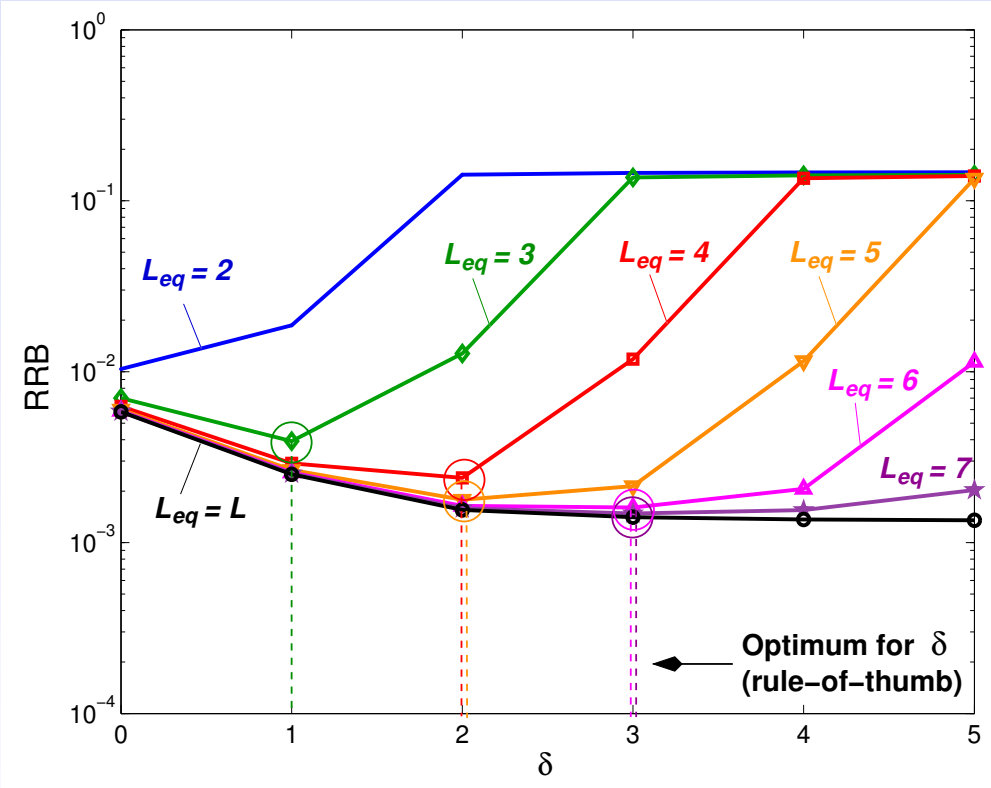

- **Case #2:** $L_{eq} < L$

Rule-of-thumb: Choose $\delta \approx \lfloor L_{eq}/2 \rfloor$.

Jan Mietzner
ICT, University of Kiel

Analytical Results and Optimization of the Delay Parameter (VII)

- **Example:** GSM propagation profile TU, $E_s/N_o = 10$ dB

RRB as a function of δ

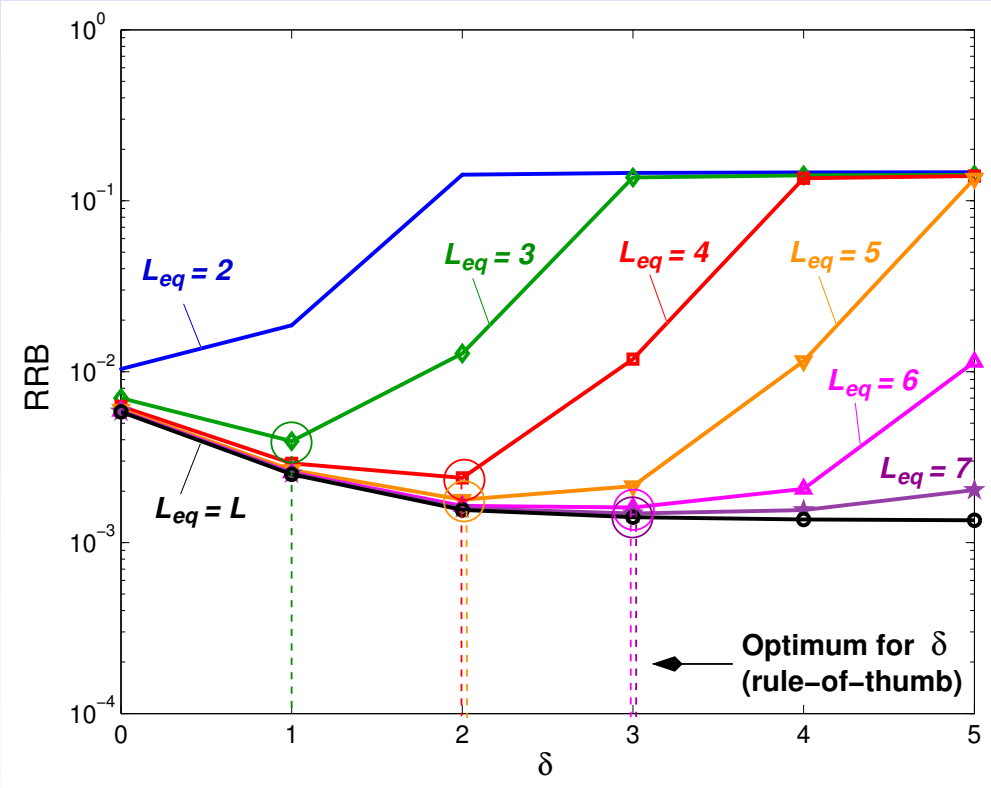

- **Case #2:** $L_{eq} < L$

  Rule-of-thumb: Choose $\delta \approx \lfloor L_{eq}/2 \rfloor$.

- GSM/GPRS: Typically $L_{eq} = 5$

  $\Longrightarrow$ Near optimum for $\delta = 2$.

Conclusions

- **General context:**

  Usefulness of STC for 2.5G/3G wireless systems $\longrightarrow$ Higher data rates by exploiting spatial diversity.

- **GSM/GPRS system:**
  - Transmitter structure improved by means of delay diversity.
  - Performance improvements accomplished for different delays.

- **Analytical results:**
  - Modified RAKE receiver bound as a function of the delay parameter δ applied at Tx antenna 2.
  - Optimization of δ, given different equalizer/detector lengths $L_{eq} \leq L$.